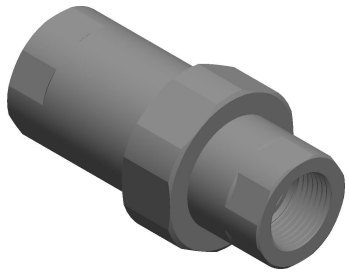

ITEM	DESCRIPTION	MATERIAL
1	VALVE BODY W/ UNION THREADS	300 Series SS
2	UNION NUT	300 Series SS
3	FEMALE THREADED INSERT	300 Series SS
4	PLUG	300 Series SS
5	OPERATING SPRING	300 Series SS
6	THERMAL ACTUATOR	300 Series SS
7	O-RING	Buna-N
8	CHECK VALVE (OPTIONAL)	NONE

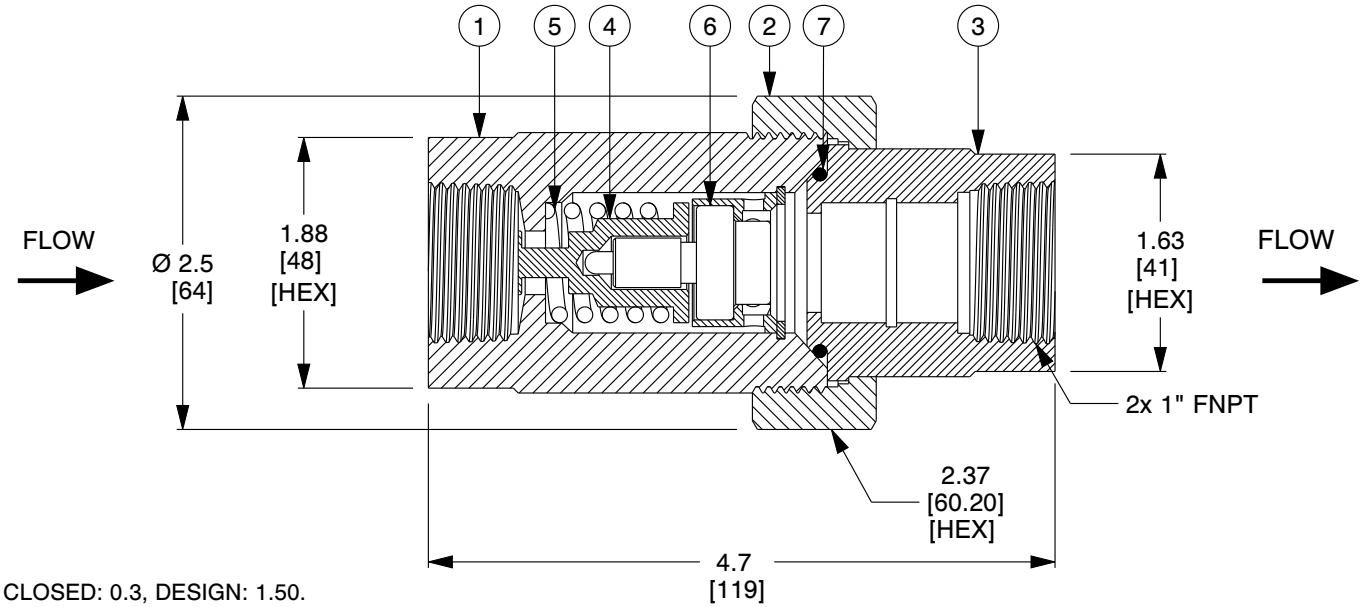

NOTES:

1. Cv: OPEN: 2.7, CLOSED: 0.3, DESIGN: 1.50.
2. WEIGHT: 3.1 Lbs, (1.4 Kg).
3. MAXIMUM WORKING PRESSURE: 200 PSIG (14 BAR).
4. MAXIMUM WORKING TEMPERATURE: 250°F (121°C).
5. XXX REFERS TO THE DESIRED CLOSING TEMPERATURE IN °F.
6. ALL COMPONENTS ARE NSF/ANSI 61 AND NSF 372 CERTIFIED FOR DOMESTIC WATER SYSTEMS.

COMPONENT	CircuitSolver Union Cold Water (CSU-CW)

ThermOmegaTech

ThermOmegaTech, Inc.
353 Ivyland Road
Warminster, PA 18974-2205, USA
Ph: 215-798-5978

This file and any associated information and specifications are provided for reference and evaluation purposes only, and is subject to change without notice. ThermOmegaTech makes no representations, warranties or guarantees as to the appropriateness, accuracy, completeness, or suitability for any purpose, of the file, information or specifications. You are solely responsible for the use of the file, information or specifications.

This drawing is the property of ThermOmegaTech. It contains confidential, proprietary information that is ThermOmegaTech property. Do not disclose to or duplicate for others except as authorized by ThermOmegaTech.

SCALE	NTS

CSU-CW-1-XXX

1"- CSU-CW

UNIT
INCH [MM]
SHEET
1 of 1